ISSUE	REVISIONS	DRAWN	APPROVED	DATE
△				

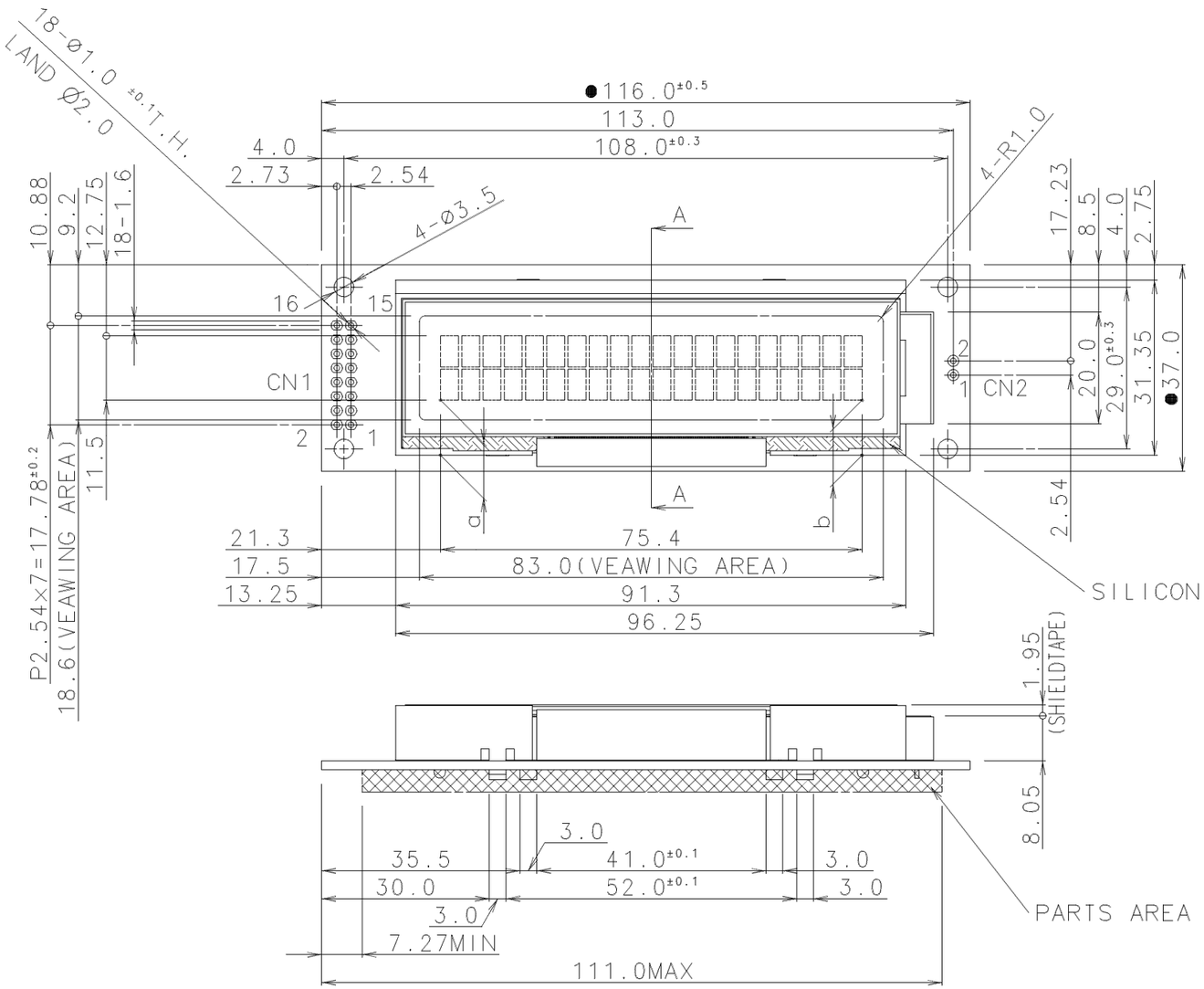

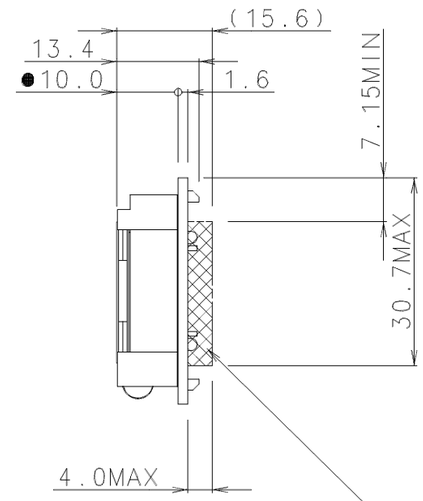

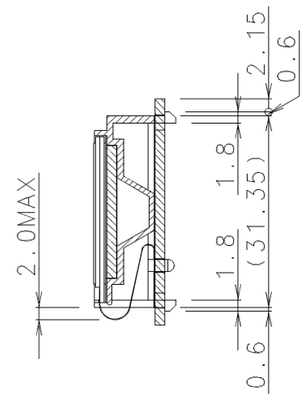

SECTION A-A

PARTS AREA

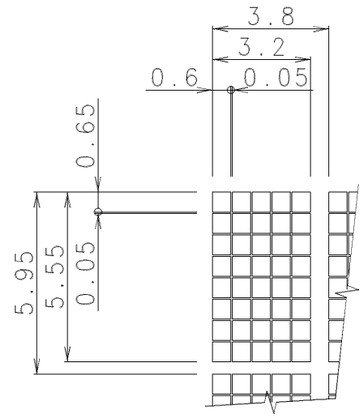

DOT DETAIL(SCALE 10:1)

LIIGHT EMITTED	LED CIRCUIT
WHITE	ANODE / CATHODE
GREEN	
BLUE	
RED	ANODE / CATHODE

PIN ASSIGNMENT

CN1

NO.	SYMBOL	NO.	SYMBOL
1	LED(A)	9	DB0
2	LED(K)	10	DB1
3	VSS	11	DB2
4	VCC	12	DB3
5	VEE	13	DB4
6	RS	14	DB5
7	R/W	15	DB6
8	E	16	DB7

CN2

NO.	SYMBOL
1	LED(A)
2	LED(K)

NOTE

1.The dimensions with the mark (●) are controled as a particular characteristic.

2.|a-b|≦0.7 (DISPLAY SKEW)

TOLERANCE				THIRD ANGLE PROJECTION	DATE MAY.27'02	OPTREX CORPORATION
MEASURE	A	B	C			
L≦16	±0.1	±0.3	±1	UNIT mm	APPROVED T.Okamoto	TITLE DIMENSIONAL OUTLINE
16<L≦63	±0.2	±0.5	±1.5			
63<L≦250	±0.3	±0.8	±2	SCALE 1:1	CHECKED S.Kuwabara	CODE C-51505-AD SERIES
250<L≦500	±0.5	±1.2	±3			
500<L	±0.8	±2	±4		DRAWN M.Katayama	DWG NO UE-311044
ANGLE	±1°	±5°	±10°			